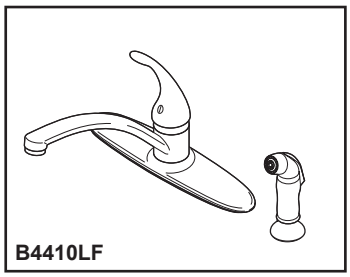

B4410LF

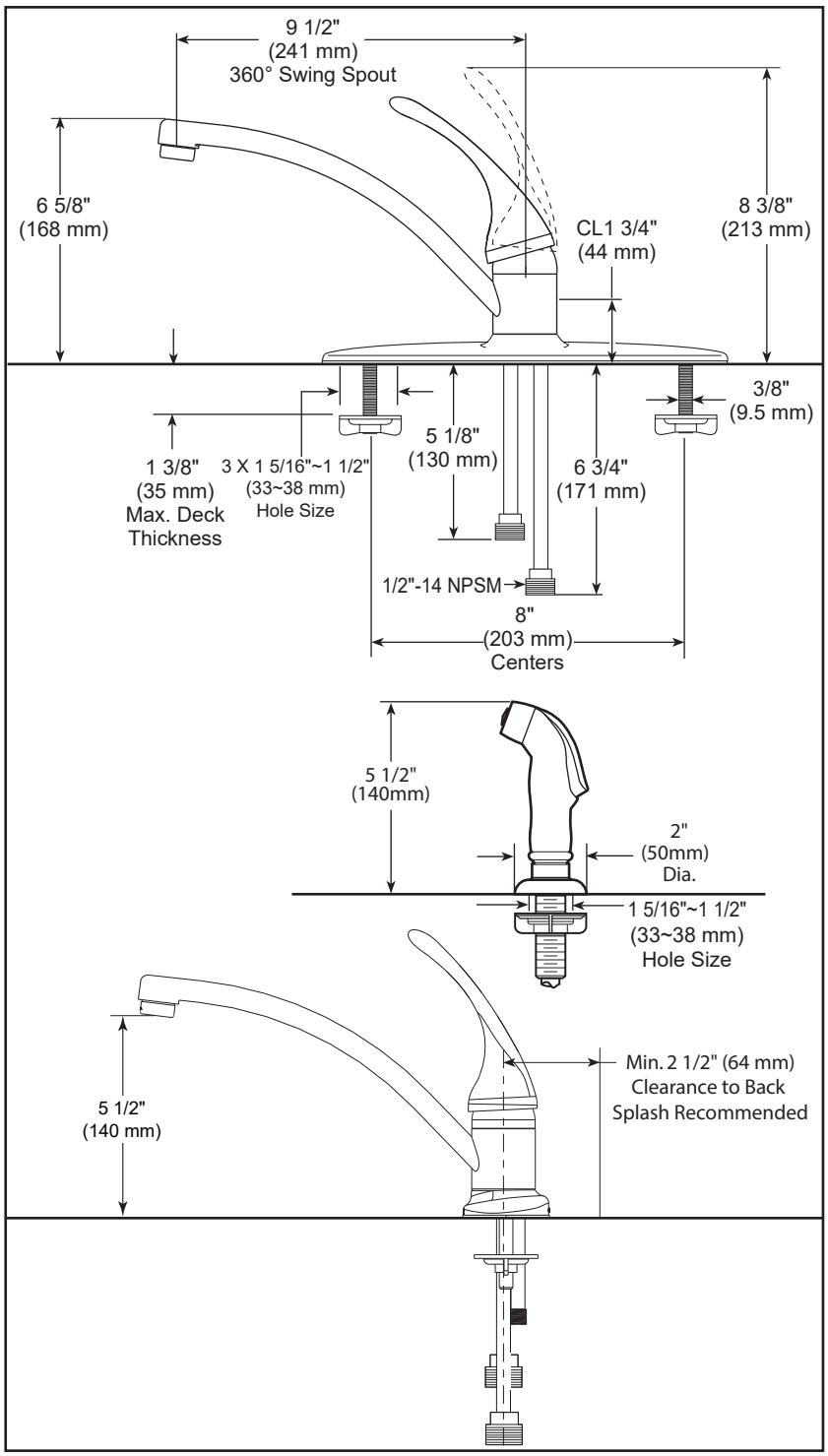

▲ Designate proper finish suffix

see what Delta can do™

KITCHEN FAUCETS

- Single Handle With Side Spray
- 4 Hole Sink Applications
- 8” Centerset

STANDARD SPECIFICATIONS:

- Max flow rate 1.8 gpm @ 60 psi, 6.8 L/min @ 414 kPa
- 8″ (203 mm) centerset.
- Spout rotates 360˚.
- All operating parts shall be replaceable from the top.
- 1/2″ -14 NPSM threaded male inlet adapters.
- Lever handle control mechanism is the rotating stainless steel ball type with replaceable non-metallic seats.
- Control handle shall return to neutral position when valve is turned off.
- Models with spray attachment has antisiphon device as integral part of valve body.

WARRANTY

- Parts and Finish – Lifetime limited warranty; or for commercial purchasers, 10 years for multi-family residential (apartments and condominiums) and 5 years for all other commercial uses, in each case from the date the product is received by the original purchaser or their authorized representative (installation contractor, etc.).
- Please go to www.deltafaucet.com for the complete details of our limited warranty.

COMPLIES WITH:

- ASME A112.18.1/ CSA B125.1
- NSF/ANSI/CAN 61 & 372
- ICC/ANSI A117.1 - Valve control only

Delta Faucet Company reserves the right (1) to make changes in specifications and materials, and (2) to change or discontinue models, both without notice or obligation. Dimensions are for reference only. See current full-line price book or www.deltafaucet.com for finish options and product availability.

Delta Faucet Company
55 E. 111th Street, Carmel, IN 46280
350 South Edgeware Road, St. Thomas, ON N5P 4L1
© 2026 Delta Faucet Company